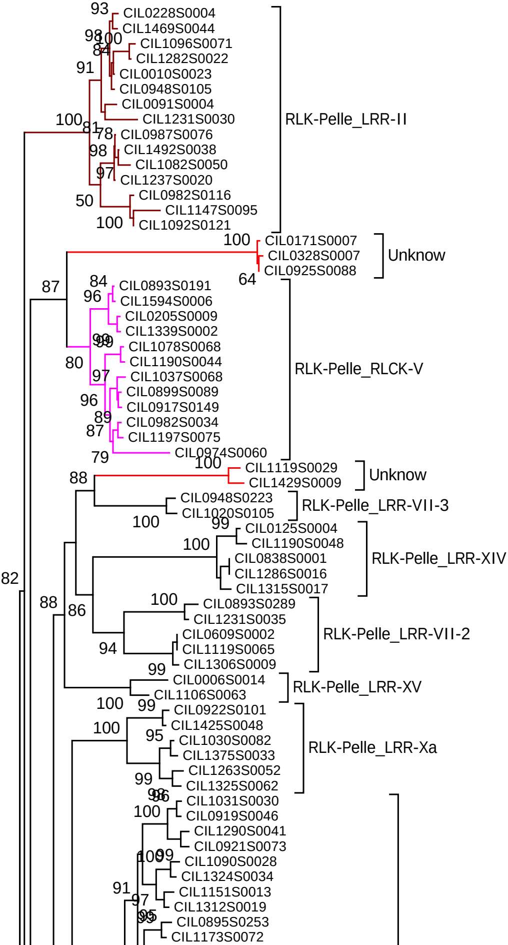
93
CIL0228S0004
CIL1469S0044
98
100
CIL1096S0071
84
CIL1282S0022
91
CIL0010S0023
CIL0948S0105
CIL0091S0004
CIL1231S0030
100
81
78
CIL0987S0076
98
CIL1492S0038
CIL1082S0050
97
CIL1237S0020
50
CIL0982S0116
CIL1147S0095
100
CIL1092S0121
RLK-Pelle_LRR-II
100
CIL0171S0007
CIL0328S0007
CIL0925S0088
64
Unknow
87
84
CIL0893S0191
96
CIL1594S0006
CIL0205S0009
CIL1339S0002
99
99
CIL1078S0068
80
CIL1190S0044
97
CIL1037S0068
96
CIL0899S0089
CIL0917S0149
89
CIL0982S0034
87
CIL1197S0075
CIL0974S0060
79
RLK-Pelle_RLCK-V
100
CIL1119S0029
88
CIL1429S0009
Unknow
CIL0948S0223
CIL1020S0105
RLK-Pelle_LRR-VII-3
100
99
CIL0125S0004
100
CIL1190S0048
CIL0838S0001
CIL1286S0016
CIL1315S0017
RLK-Pelle_LRR-XIV
82
88
86
100
CIL0893S0289
CIL1231S0035
CIL0609S0002
94
CIL1119S0065
CIL1306S0009
RLK-Pelle_LRR-VII-2
99
CIL0006S0014
CIL1106S0063
RLK-Pelle_LRR-XV
100
99
CIL0922S0101
100
CIL1425S0048
95
CIL1030S0082
CIL1375S0033
CIL1263S0052
99
CIL1325S0062
RLK-Pelle_LRR-Xa
98
96
CIL1031S0030
100
CIL0919S0046
CIL1290S0041
CIL0921S0073
100
99
CIL1090S0028
CIL1324S0034
91
CIL1151S0013
97
CIL1312S0019
99
95
CIL0895S0253
CIL1173S0072

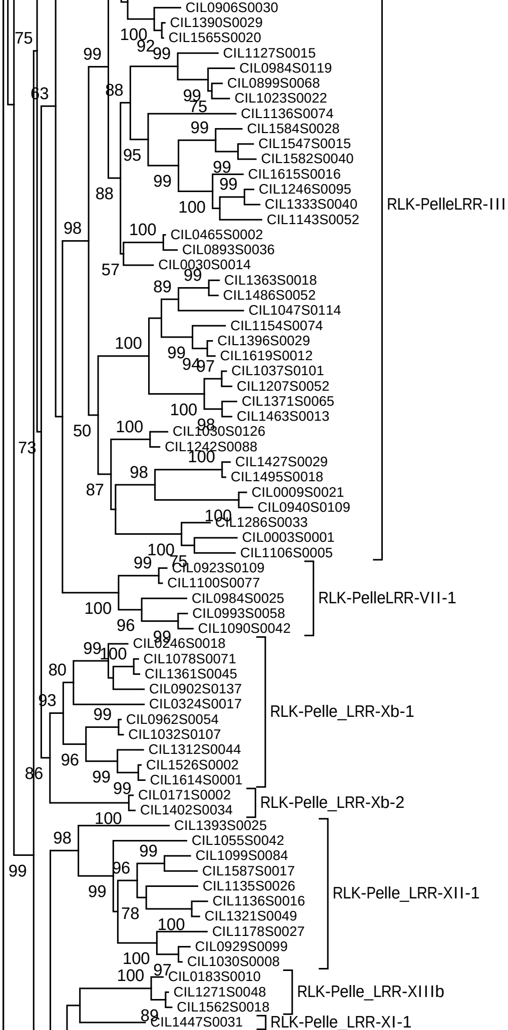
CIL0906S0030
75
CIL1390S0029
100
CIL1565S0020
92
99
99
CIL1127S0015
CIL0984S0119
63
88
CIL0899S0068
CIL1023S0022
99
75
CIL1136S0074
99
CIL1584S0028
CIL1547S0015
95
CIL1582S0040
99
CIL1615S0016
99
99
CIL1246S0095
88
100
CIL1333S0040
RLK-PelleLRR-III
CIL1143S0052
98
100
CIL0465S0002
CIL0893S0036
CIL0030S0014
57
99
CIL1363S0018
89
CIL1486S0052
CIL1047S0114
CIL1154S0074
100
CIL1396S0029
99
CIL1619S0012
94
97
CIL1037S0101
CIL1207S0052
CIL1371S0065
100
CIL1463S0013
50
100
98
CIL1030S0126
73
CIL1242S0088
100
CIL1427S0029
98
CIL1495S0018
87
CIL0009S0021
CIL0940S0109
100
CIL1286S0033
CIL0003S0001
100
CIL1106S0005
99
75
CIL0923S0109
CIL1100S0077
RLK-PelleLRR-VII-1
CIL0984S0025
100
CIL0993S0058
96
CIL1090S0042
99
CIL0246S0018
99
100
CIL1078S0071
80
CIL1361S0045
CIL0902S0137
93
CIL0324S0017
RLK-Pelle_LRR-Xb-1
99
CIL0962S0054
CIL1032S0107
CIL1312S0044
96
CIL1526S0002
86
99
CIL1614S0001
99
CIL0171S0002
RLK-Pelle_LRR-Xb-2
CIL1402S0034
100
CIL1393S0025
98
CIL1055S0042
99
CIL1099S0084
99
96
CIL1587S0017
99
CIL1135S0026
CIL1136S0016
RLK-Pelle_LRR-XII-1
78
CIL1321S0049
100
CIL1178S0027
CIL0929S0099
100
CIL1030S0008
100
97
CIL0183S0010
CIL1271S0048
RLK-Pelle_LRR-XIIIb
CIL1562S0018
89
CIL1447S0031
RLK-Pelle_LRR-XI-1

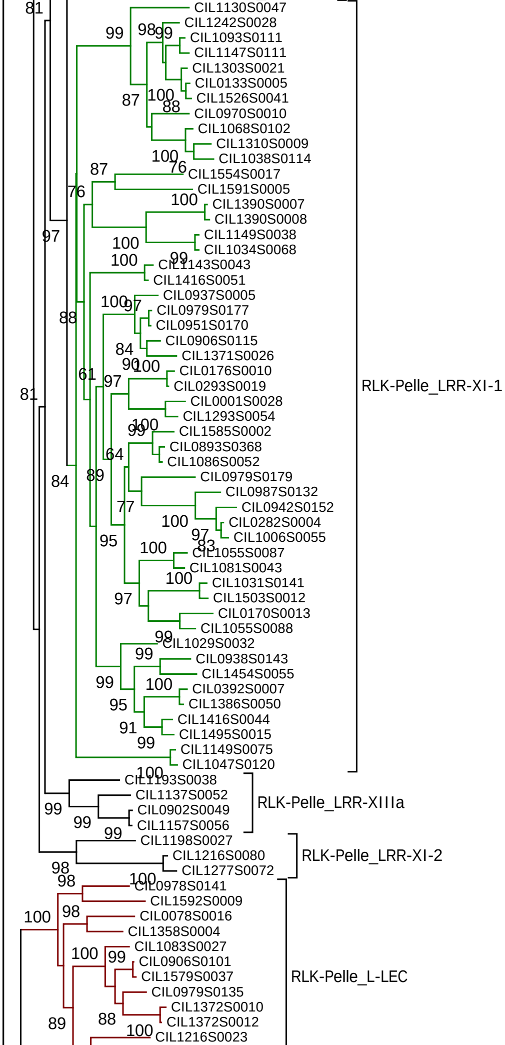
CIL1130S0047
CIL1242S0028
CIL1093S0111
CIL1147S0111
CIL1303S0021
CIL0133S0005
CIL1526S0041
CIL0970S0010
CIL1068S0102
CIL1310S0009
CIL1038S0114
CIL1554S0017
CIL1591S0005
CIL1390S0007
CIL1390S0008
CIL1149S0038
CIL1034S0068
CIL1143S0043
CIL1416S0051
CIL0937S0005
CIL0979S0177
CIL0951S0170
CIL0906S0115
CIL1371S0026
CIL0176S0010
CIL0293S0019
CIL0001S0028
CIL1293S0054
CIL1585S0002
CIL0893S0368
CIL1086S0052
CIL0979S0179
CIL0987S0132
CIL0942S0152
CIL0282S0004
CIL1006S0055
CIL1055S0087
CIL1081S0043
CIL1031S0141
CIL1503S0012
CIL0170S0013
CIL1055S0088
CIL1029S0032
CIL0938S0143
CIL1454S0055
CIL0392S0007
CIL1386S0050
CIL1416S0044
CIL1495S0015
CIL1149S0075
CIL1047S0120
RLK-Pelle_LRR-XI-1
CIL1193S0038
CIL1137S0052
CIL0902S0049
CIL1157S0056
RLK-Pelle_LRR-XIIIa
CIL1198S0027
CIL1216S0080
CIL1277S0072
RLK-Pelle_LRR-XI-2
CIL0978S0141
CIL1592S0009
CIL0078S0016
CIL1358S0004
CIL1083S0027
CIL0906S0101
CIL1579S0037
CIL0979S0135
CIL1372S0010
CIL1372S0012
CIL1216S0023
RLK-Pelle_L-LEC

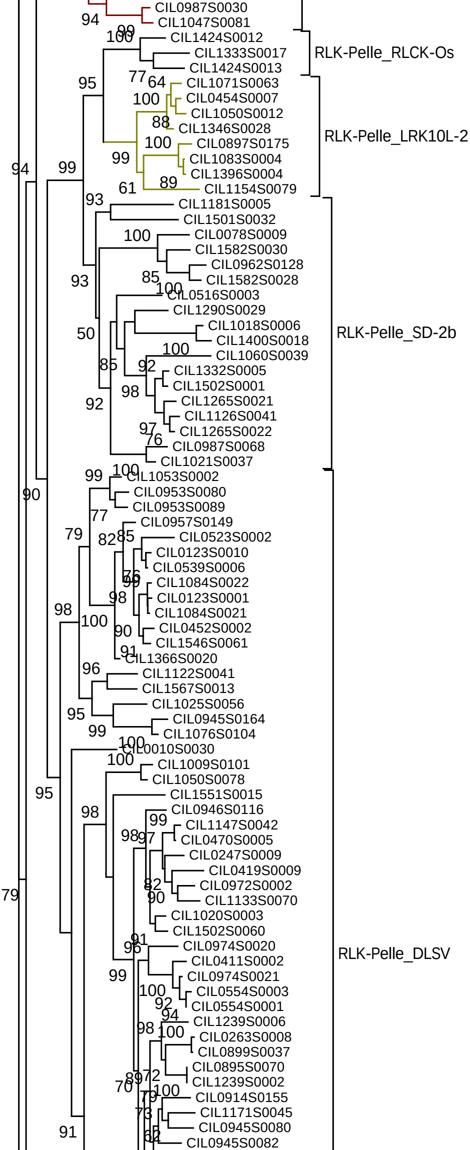
CIL0987S0030
CIL1047S0081
CIL1424S0012
CIL1333S0017
CIL1424S0013
RLK-Pelle_RLCK-Os
CIL1071S0063
CIL0454S0007
CIL1050S0012
CIL1346S0028
CIL0897S0175
CIL1083S0004
CIL1396S0004
CIL1154S0079
RLK-Pelle_LRK10L-2
CIL1181S0005
CIL1501S0032
CIL0078S0009
CIL1582S0030
CIL0962S0128
CIL1582S0028
CIL0516S0003
CIL1290S0029
CIL1018S0006
CIL1400S0018
CIL1060S0039
CIL1332S0005
CIL1502S0001
CIL1265S0021
CIL1126S0041
CIL1265S0022
CIL0987S0068
CIL1021S0037
RLK-Pelle_SD-2b
CIL1053S0002
CIL0953S0080
CIL0953S0089
CIL0957S0149
CIL0523S0002
CIL0123S0010
CIL0539S0006
CIL1084S0022
CIL0123S0001
CIL1084S0021
CIL0452S0002
CIL1546S0061
CIL1366S0020
CIL1122S0041
CIL1567S0013
CIL1025S0056
CIL0945S0164
CIL1076S0104
CIL0010S0030
CIL1009S0101
CIL1050S0078
CIL1551S0015
CIL0946S0116
CIL1147S0042
CIL0470S0005
CIL0247S0009
CIL0419S0009
CIL0972S0002
CIL1133S0070
CIL1020S0003
CIL1502S0060
CIL0974S0020
CIL0411S0002
CIL0974S0021
CIL0554S0003
CIL0554S0001
CIL1239S0006
CIL0263S0008
CIL0899S0037
CIL0895S0070
CIL1239S0002
CIL0914S0155
CIL1171S0045
CIL0945S0080
CIL0945S0082
RLK-Pelle_DLSV

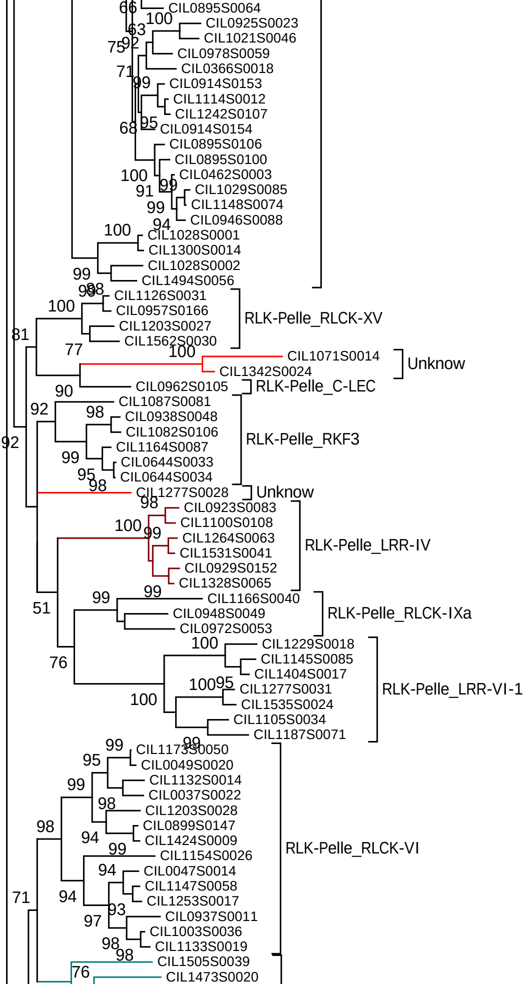
66
CIL0895S0064
100
CIL0925S0023
63
CIL1021S0046
75
92
CIL0978S0059
71
CIL0366S0018
99
CIL0914S0153
CIL1114S0012
CIL1242S0107
68
95
CIL0914S0154
CIL0895S0106
CIL0895S0100
100
CIL0462S0003
91
99
CIL1029S0085
99
CIL1148S0074
94
CIL0946S0088
100
CIL1028S0001
CIL1300S0014
CIL1028S0002
99
CIL1494S0056
98
98
CIL1126S0031
100
CIL0957S0166
CIL1203S0027
81
CIL1562S0030
RLK-Pelle_RLCK-XV
77
100
CIL1071S0014
CIL1342S0024
Unknow
CIL0962S0105
RLK-Pelle_C-LEC
90
CIL1087S0081
92
98
CIL0938S0048
CIL1082S0106
92
CIL1164S0087
99
CIL0644S0033
95
CIL0644S0034
RLK-Pelle_RKF3
98
CIL1277S0028
Unknow
98
CIL0923S0083
100
CIL1100S0108
99
CIL1264S0063
CIL1531S0041
CIL0929S0152
CIL1328S0065
RLK-Pelle_LRR-IV
99
99
CIL1166S0040
51
CIL0948S0049
CIL0972S0053
RLK-Pelle_RLCK-IXa
100
CIL1229S0018
76
CIL1145S0085
CIL1404S0017
100
95
CIL1277S0031
100
CIL1535S0024
CIL1105S0034
CIL1187S0071
RLK-Pelle_LRR-VI-1
99
99
CIL1173S0050
95
CIL0049S0020
99
CIL1132S0014
CIL0037S0022
98
98
CIL1203S0028
CIL0899S0147
94
CIL1424S0009
99
CIL1154S0026
RLK-Pelle_RLCK-VI
94
CIL0047S0014
94
CIL1147S0058
CIL1253S0017
93
71
97
CIL0937S0011
CIL1003S0036
98
CIL1133S0019
98
CIL1505S0039
76
CIL1473S0020

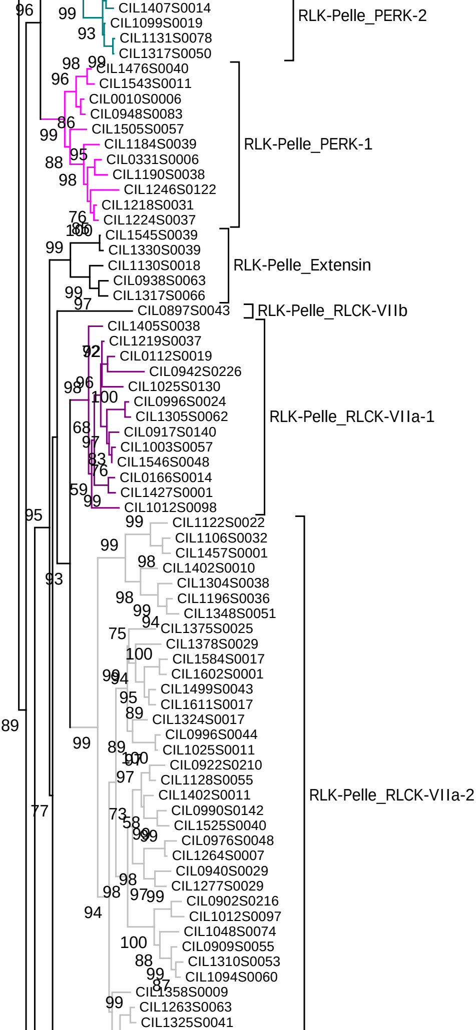
CIL1407S0014
CIL1099S0019
CIL1131S0078
CIL1317S0050
RLK-Pelle_PERK-2
CIL1476S0040
CIL1543S0011
CIL0010S0006
CIL0948S0083
CIL1505S0057
CIL1184S0039
CIL0331S0006
CIL1190S0038
CIL1246S0122
CIL1218S0031
CIL1224S0037
RLK-Pelle_PERK-1
CIL1545S0039
CIL1330S0039
CIL1130S0018
CIL0938S0063
CIL1317S0066
RLK-Pelle_Extensin
CIL0897S0043
RLK-Pelle_RLCK-VIIb
CIL1405S0038
CIL1219S0037
CIL0112S0019
CIL0942S0226
CIL1025S0130
CIL0996S0024
CIL1305S0062
CIL0917S0140
CIL1003S0057
CIL1546S0048
CIL0166S0014
CIL1427S0001
CIL1012S0098
RLK-Pelle_RLCK-VIIa-1
CIL1122S0022
CIL1106S0032
CIL1457S0001
CIL1402S0010
CIL1304S0038
CIL1196S0036
CIL1348S0051
CIL1375S0025
CIL1378S0029
CIL1584S0017
CIL1602S0001
CIL1499S0043
CIL1611S0017
CIL1324S0017
CIL0996S0044
CIL1025S0011
CIL0922S0210
CIL1128S0055
CIL1402S0011
CIL0990S0142
CIL1525S0040
CIL0976S0048
CIL1264S0007
CIL0940S0029
CIL1277S0029
CIL0902S0216
CIL1012S0097
CIL1048S0074
CIL0909S0055
CIL1310S0053
CIL1094S0060
CIL1358S0009
CIL1263S0063
CIL1325S0041
RLK-Pelle_RLCK-VIIa-2

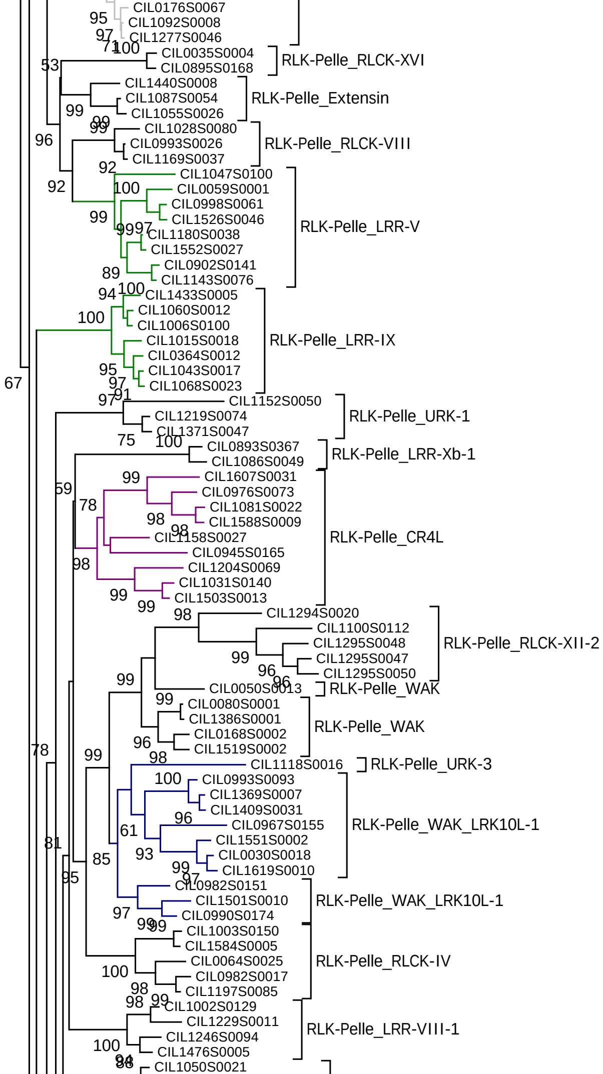

95
97
71
100
CIL0176S0067
CIL1092S0008
CIL1277S0046
53
CIL0035S0004
CIL0895S0168
RLK-Pelle_RLCK-XVI
CIL1440S0008
CIL1087S0054
CIL1055S0026
RLK-Pelle_Extensin
99
99
99
96
CIL1028S0080
CIL0993S0026
CIL1169S0037
RLK-Pelle_RLCK-VIII
92
92
100
CIL1047S0100
CIL0059S0001
CIL0998S0061
CIL1526S0046
RLK-Pelle_LRR-V
99
99
97
CIL1180S0038
CIL1552S0027
89
CIL0902S0141
CIL1143S0076
94
100
CIL1433S0005
100
CIL1060S0012
CIL1006S0100
CIL1015S0018
RLK-Pelle_LRR-IX
CIL0364S0012
95
CIL1043S0017
97
CIL1068S0023
67
97
91
CIL1152S0050
CIL1219S0074
RLK-Pelle_URK-1
CIL1371S0047
75
100
CIL0893S0367
CIL1086S0049
RLK-Pelle_LRR-Xb-1
59
99
CIL1607S0031
CIL0976S0073
78
CIL1081S0022
98
CIL1588S0009
RLK-Pelle_CR4L
98
CIL1158S0027
CIL0945S0165
98
CIL1204S0069
CIL1031S0140
99
99
CIL1503S0013
98
CIL1294S0020
CIL1100S0112
CIL1295S0048
RLK-Pelle_RLCK-XII-2
99
CIL1295S0047
96
CIL1295S0050
96
99
CIL0050S0013
RLK-Pelle_WAK
99
CIL0080S0001
CIL1386S0001
RLK-Pelle_WAK
96
CIL0168S0002
CIL1519S0002
78
99
98
CIL1118S0016
RLK-Pelle_URK-3
100
CIL0993S0093
CIL1369S0007
CIL1409S0031
96
CIL0967S0155
RLK-Pelle_WAK_LRK10L-1
61
CIL1551S0002
81
93
CIL0030S0018
85
99
CIL1619S0010
95
97
CIL0982S0151
CIL1501S0010
RLK-Pelle_WAK_LRK10L-1
97
CIL0990S0174
99
99
CIL1003S0150
CIL1584S0005
CIL0064S0025
RLK-Pelle_RLCK-IV
100
CIL0982S0017
98
CIL1197S0085
98
99
CIL1002S0129
CIL1229S0011
RLK-Pelle_LRR-VIII-1
CIL1246S0094
100
CIL1476S0005
94
88
CIL1050S0021

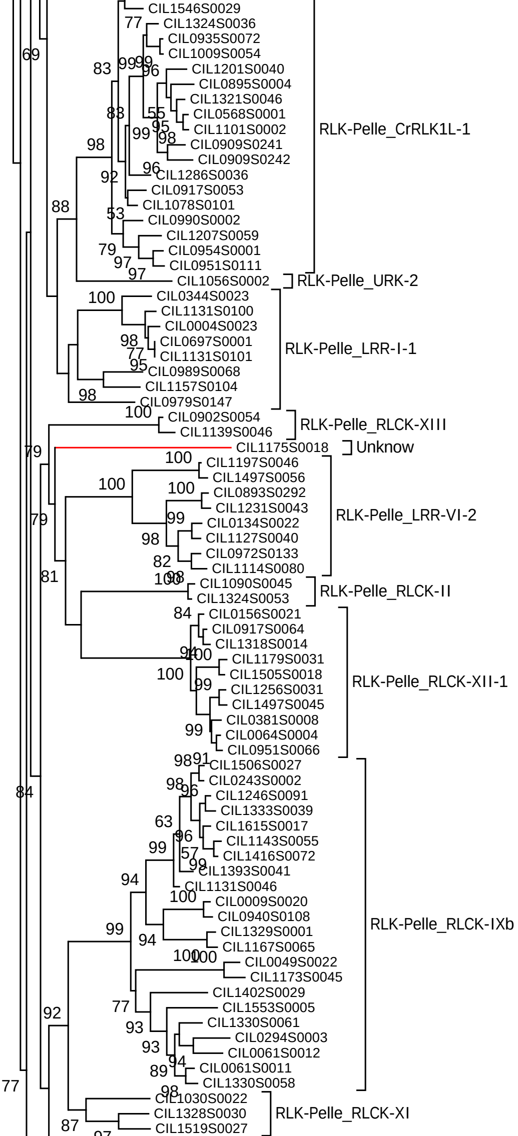
CIL1546S0029
CIL1324S0036
CIL0935S0072
CIL1009S0054
CIL1201S0040
CIL0895S0004
CIL1321S0046
CIL0568S0001
CIL1101S0002
CIL0909S0241
CIL0909S0242
CIL1286S0036
CIL0917S0053
CIL1078S0101
CIL0990S0002
CIL1207S0059
CIL0954S0001
CIL0951S0111
RLK-Pelle_CrRLK1L-1
CIL1056S0002
RLK-Pelle_URK-2
CIL0344S0023
CIL1131S0100
CIL0004S0023
CIL0697S0001
CIL1131S0101
CIL0989S0068
CIL1157S0104
CIL0979S0147
RLK-Pelle_LRR-I-1
CIL0902S0054
CIL1139S0046
RLK-Pelle_RLCK-XIII
CIL1175S0018
Unknow
CIL1197S0046
CIL1497S0056
CIL0893S0292
CIL1231S0043
CIL0134S0022
CIL1127S0040
CIL0972S0133
CIL1114S0080
RLK-Pelle_LRR-VI-2
CIL1090S0045
CIL1324S0053
RLK-Pelle_RLCK-II
CIL0156S0021
CIL0917S0064
CIL1318S0014
CIL1179S0031
CIL1505S0018
CIL1256S0031
CIL1497S0045
CIL0381S0008
CIL0064S0004
CIL0951S0066
RLK-Pelle_RLCK-XII-1
CIL1506S0027
CIL0243S0002
CIL1246S0091
CIL1333S0039
CIL1615S0017
CIL1143S0055
CIL1416S0072
CIL1393S0041
CIL1131S0046
CIL0009S0020
CIL0940S0108
CIL1329S0001
CIL1167S0065
CIL0049S0022
CIL1173S0045
CIL1402S0029
CIL1553S0005
CIL1330S0061
CIL0294S0003
CIL0061S0012
CIL0061S0011
CIL1330S0058
RLK-Pelle_RLCK-IXb
CIL1030S0022
CIL1328S0030
CIL1519S0027
RLK-Pelle_RLCK-XI

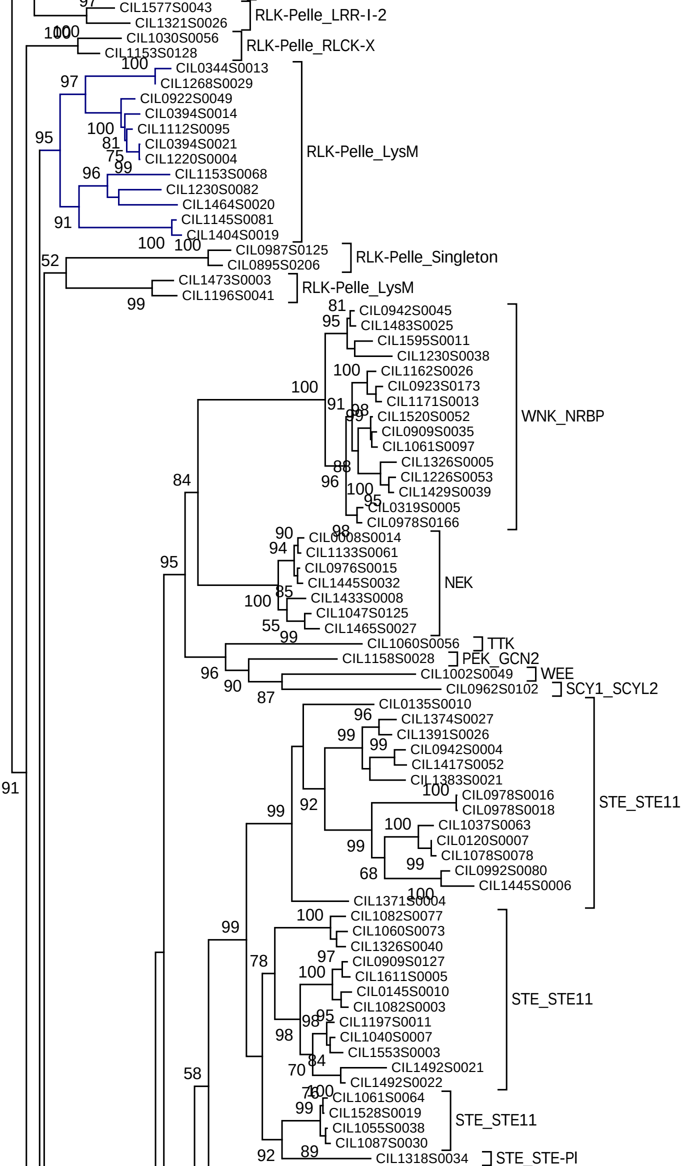
97
CIL1577S0043
CIL1321S0026
RLK-Pelle_LRR-I-2
100
100
CIL1030S0056
CIL1153S0128
RLK-Pelle_RLCK-X
100
CIL0344S0013
CIL1268S0029
97
CIL0922S0049
CIL0394S0014
100
CIL1112S0095
81
CIL0394S0021
75
CIL1220S0004
95
RLK-Pelle_LysM
99
96
CIL1153S0068
CIL1230S0082
CIL1464S0020
91
CIL1145S0081
CIL1404S0019
100
100
CIL0987S0125
CIL0895S0206
RLK-Pelle_Singleton
52
CIL1473S0003
CIL1196S0041
RLK-Pelle_LysM
99
81
CIL0942S0045
95
CIL1483S0025
CIL1595S0011
CIL1230S0038
100
CIL1162S0026
100
CIL0923S0173
CIL1171S0013
91
98
99
CIL1520S0052
WNK_NRBP
CIL0909S0035
CIL1061S0097
CIL1326S0005
88
CIL1226S0053
96
100
CIL1429S0039
95
CIL0319S0005
CIL0978S0166
84
90
98
CIL0008S0014
94
CIL1133S0061
CIL0976S0015
95
CIL1445S0032
NEK
85
CIL1433S0008
100
CIL1047S0125
55
CIL1465S0027
99
CIL1060S0056
TTK
CIL1158S0028
PEK_GCN2
96
CIL1002S0049
WEE
90
CIL0962S0102
SCY1_SCYL2
87
CIL0135S0010
96
CIL1374S0027
99
CIL1391S0026
99
CIL0942S0004
CIL1417S0052
CIL1383S0021
100
CIL0978S0016
91
92
CIL0978S0018
STE_STE11
99
100
CIL1037S0063
CIL0120S0007
99
CIL1078S0078
99
CIL0992S0080
68
CIL1445S0006
100
CIL1371S0004
100
CIL1082S0077
99
CIL1060S0073
CIL1326S0040
78
97
CIL0909S0127
100
CIL1611S0005
CIL0145S0010
STE_STE11
CIL1082S0003
98
95
CIL1197S0011
98
CIL1040S0007
CIL1553S0003
84
58
70
CIL1492S0021
CIL1492S0022
76
100
CIL1061S0064
99
CIL1528S0019
STE_STE11
CIL1055S0038
CIL1087S0030
92
89
CIL1318S0034
STE_STE-PI

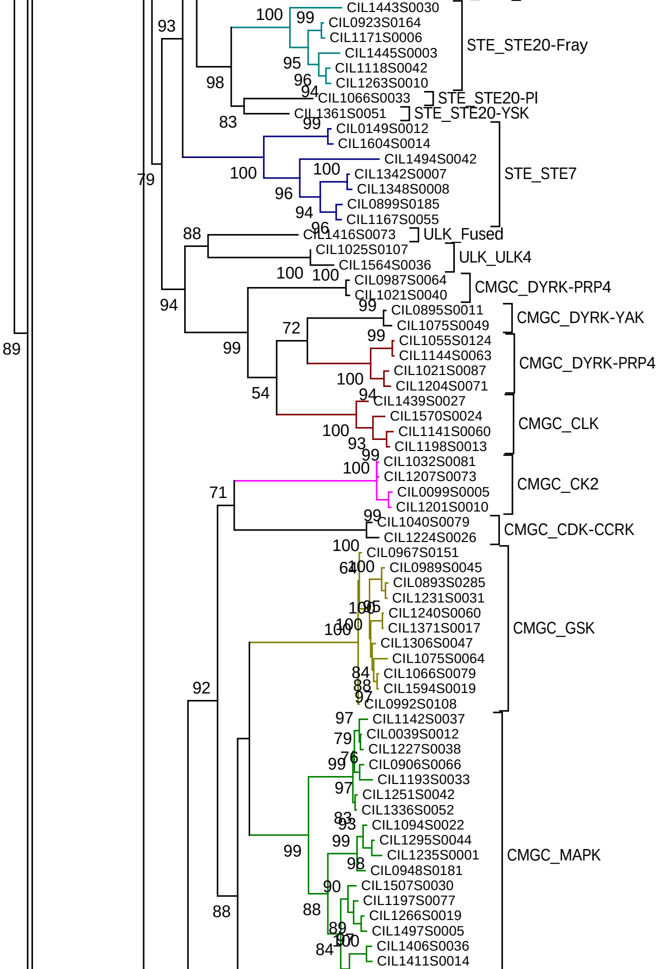
100
99
CIL1443S0030
CIL0923S0164
93
CIL1171S0006
STE_STE20-Fray
CIL1445S0003
95
CIL1118S0042
98
96
CIL1263S0010
94
CIL1066S0033
STE_STE20-PI
CIL1361S0051
STE_STE20-YSK
83
99
CIL0149S0012
CIL1604S0014
CIL1494S0042
79
100
100
CIL1342S0007
STE_STE7
CIL1348S0008
96
CIL0899S0185
94
CIL1167S0055
96
88
CIL1416S0073
ULK_Fused
CIL1025S0107
ULK_ULK4
CIL1564S0036
100
100
CIL0987S0064
CMGC_DYRK-PRP4
CIL1021S0040
94
99
CIL0895S0011
CMGC_DYRK-YAK
CIL1075S0049
72
89
99
CIL1055S0124
99
CIL1144S0063
CMGC_DYRK-PRP4
CIL1021S0087
100
CIL1204S0071
54
94
CIL1439S0027
CIL1570S0024
CMGC_CLK
100
CIL1141S0060
93
CIL1198S0013
99
CIL1032S0081
100
CIL1207S0073
CMGC_CK2
71
CIL0099S0005
CIL1201S0010
99
CIL1040S0079
CMGC_CDK-CCRK
CIL1224S0026
100
CIL0967S0151
64
100
CIL0989S0045
CIL0893S0285
CIL1231S0031
100
95
CIL1240S0060
100
100
CIL1371S0017
CMGC_GSK
CIL1306S0047
CIL1075S0064
84
CIL1066S0079
92
88
CIL1594S0019
97
CIL0992S0108
97
CIL1142S0037
79
CIL0039S0012
CIL1227S0038
99
76
CIL0906S0066
CIL1193S0033
97
CIL1251S0042
CIL1336S0052
83
93
CIL1094S0022
99
CIL1295S0044
99
CMGC_MAPK
CIL1235S0001
98
CIL0948S0181
90
CIL1507S0030
88
88
CIL1197S0077
CIL1266S0019
89
CIL1497S0005
97
100
CIL1406S0036
84
CIL1411S0014

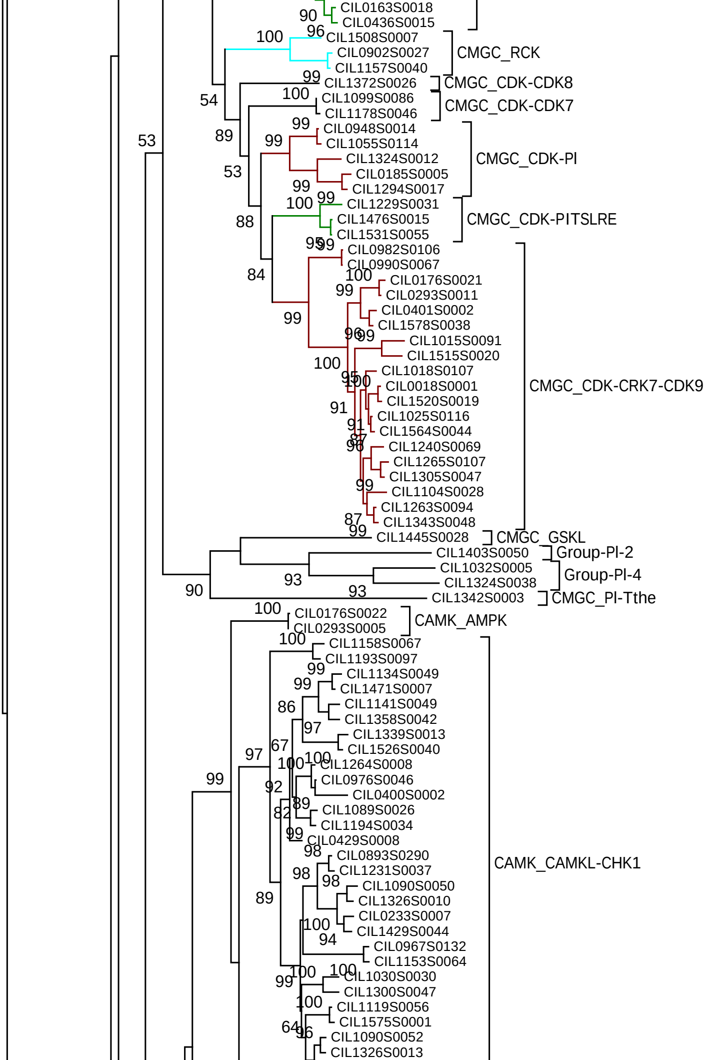
90
CIL0163S0018
CIL0436S0015
100
96
CIL1508S0007
CIL0902S0027
CIL1157S0040
CMGC_RCK
99
CIL1372S0026
CMGC_CDK-CDK8
54
100
CIL1099S0086
CIL1178S0046
CMGC_CDK-CDK7
53
89
99
99
CIL0948S0014
CIL1055S0114
CIL1324S0012
CIL0185S0005
CIL1294S0017
CMGC_CDK-PI
53
99
100
99
CIL1229S0031
CIL1476S0015
CIL1531S0055
CMGC_CDK-PITSLRE
88
95
99
CIL0982S0106
CIL0990S0067
84
100
CIL0176S0021
99
CIL0293S0011
CIL0401S0002
99
CIL1578S0038
96
99
CIL1015S0091
CIL1515S0020
100
95
100
CIL1018S0107
CIL0018S0001
CIL1520S0019
91
CIL1025S0116
91
CIL1564S0044
87
98
CIL1240S0069
CIL1265S0107
CIL1305S0047
99
CIL1104S0028
CIL1263S0094
87
CIL1343S0048
CMGC_CDK-CRK7-CDK9
99
CIL1445S0028
CMGC_GSKL
CIL1403S0050
Group-PI-2
CIL1032S0005
93
CIL1324S0038
Group-PI-4
90
93
CIL1342S0003
CMGC_PI-Tthe
100
CIL0176S0022
CIL0293S0005
CAMK_AMPK
100
CIL1158S0067
CIL1193S0097
99
CIL1134S0049
99
CIL1471S0007
86
CIL1141S0049
CIL1358S0042
97
CIL1339S0013
CIL1526S0040
67
97
100
100
CIL1264S0008
CIL0976S0046
99
CIL0400S0002
92
89
CIL1089S0026
82
CIL1194S0034
99
CIL0429S0008
98
CIL0893S0290
CIL1231S0037
98
98
CIL1090S0050
89
CIL1326S0010
CIL0233S0007
100
CIL1429S0044
94
CIL0967S0132
CIL1153S0064
100
100
CIL1030S0030
99
CIL1300S0047
100
CIL1119S0056
CIL1575S0001
64
96
CIL1090S0052
CIL1326S0013
CAMK_CAMKL-CHK1

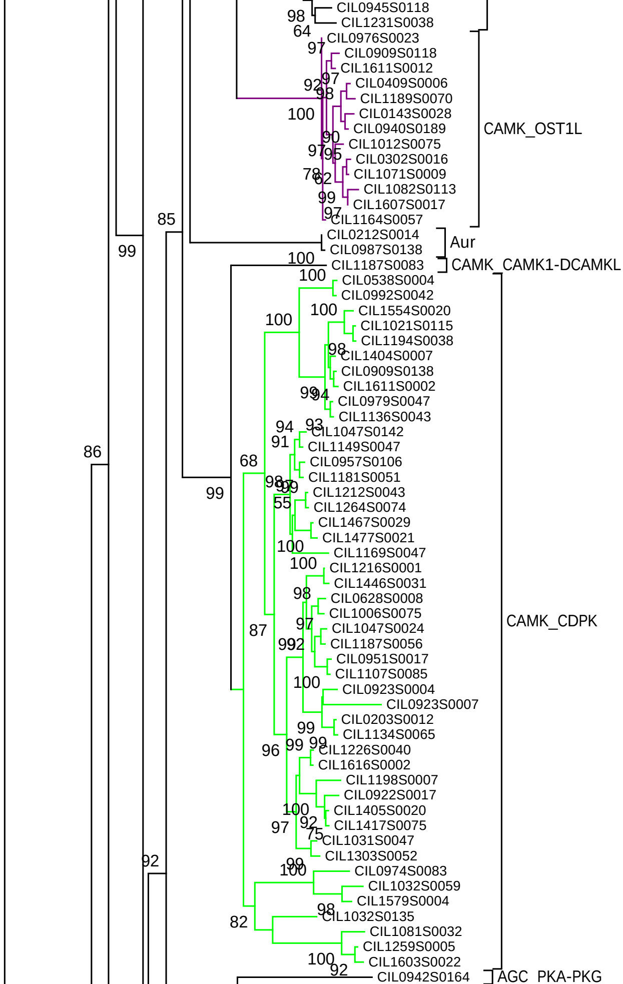
98
CIL0945S0118
CIL1231S0038
64
CIL0976S0023
97
CIL0909S0118
CIL1611S0012
92
97
CIL0409S0006
98
CIL1189S0070
100
CIL0143S0028
CIL0940S0189
CAMK_OST1L
90
CIL1012S0075
97
95
CIL0302S0016
78
62
CIL1071S0009
CIL1082S0113
99
CIL1607S0017
85
97
CIL1164S0057
CIL0212S0014
Aur
99
CIL0987S0138
100
CIL1187S0083
CAMK_CAMK1-DCAMKL
100
CIL0538S0004
CIL0992S0042
100
CIL1554S0020
100
CIL1021S0115
CIL1194S0038
98
CIL1404S0007
CIL0909S0138
CIL1611S0002
99
94
CIL0979S0047
CIL1136S0043
94
93
CIL1047S0142
91
CIL1149S0047
86
CIL0957S0106
68
CIL1181S0051
98
97
99
CIL1212S0043
99
55
CIL1264S0074
CIL1467S0029
CIL1477S0021
100
CIL1169S0047
100
CIL1216S0001
CIL1446S0031
98
CIL0628S0008
CIL1006S0075
CAMK_CDPK
97
CIL1047S0024
87
99
92
CIL1187S0056
CIL0951S0017
CIL1107S0085
100
CIL0923S0004
CIL0923S0007
CIL0203S0012
99
CIL1134S0065
96
99
99
CIL1226S0040
CIL1616S0002
CIL1198S0007
CIL0922S0017
100
CIL1405S0020
97
92
CIL1417S0075
75
CIL1031S0047
CIL1303S0052
92
99
100
CIL0974S0083
CIL1032S0059
CIL1579S0004
98
82
CIL1032S0135
CIL1081S0032
CIL1259S0005
100
CIL1603S0022
92
CIL0942S0164
AGC_PKA-PKG

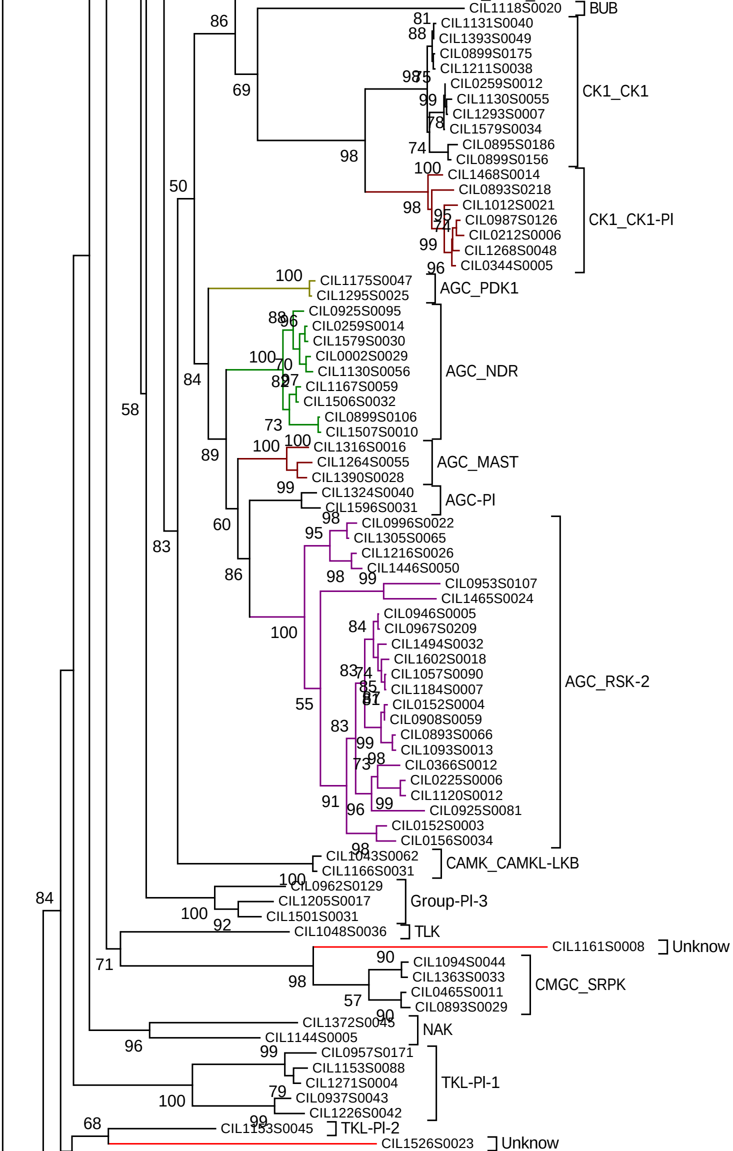
CIL1118S0020
BUB
CIL1131S0040
CIL1393S0049
CIL0899S0175
CIL1211S0038
CIL0259S0012
CIL1130S0055
CIL1293S0007
CIL1579S0034
CIL0895S0186
CIL0899S0156
CK1_CK1
CIL1468S0014
CIL0893S0218
CIL1012S0021
CIL0987S0126
CIL0212S0006
CIL1268S0048
CIL0344S0005
CK1_CK1-PI
CIL1175S0047
CIL1295S0025
AGC_PDK1
CIL0925S0095
CIL0259S0014
CIL1579S0030
CIL0002S0029
CIL1130S0056
CIL1167S0059
CIL1506S0032
CIL0899S0106
CIL1507S0010
AGC_NDR
CIL1316S0016
CIL1264S0055
CIL1390S0028
AGC_MAST
CIL1324S0040
CIL1596S0031
AGC-PI
CIL0996S0022
CIL1305S0065
CIL1216S0026
CIL1446S0050
CIL0953S0107
CIL1465S0024
CIL0946S0005
CIL0967S0209
CIL1494S0032
CIL1602S0018
CIL1057S0090
CIL1184S0007
CIL0152S0004
CIL0908S0059
CIL0893S0066
CIL1093S0013
CIL0366S0012
CIL0225S0006
CIL1120S0012
CIL0925S0081
CIL0152S0003
CIL0156S0034
AGC_RSK-2
CIL1043S0062
CIL1166S0031
CAMK_CAMKL-LKB
CIL0962S0129
CIL1205S0017
CIL1501S0031
Group-PI-3
CIL1048S0036
TLK
CIL1161S0008
Unknow
CIL1094S0044
CIL1363S0033
CIL0465S0011
CIL0893S0029
CMGC_SRPK
CIL1372S0045
CIL1144S0005
NAK
CIL0957S0171
CIL1153S0088
CIL1271S0004
CIL0937S0043
CIL1226S0042
TKL-PI-1
CIL1153S0045
TKL-PI-2
CIL1526S0023
Unknow
86
81
88
69
98
75
99
78
74
98
100
50
98
95
74
99
96
100
88
96
100
70
84
82
97
73
58
89
100
100
99
60
83
98
95
86
98
99
100
84
83
74
85
87
81
55
83
99
98
73
91
96
99
98
100
84
100
92
71
90
98
57
90
96
99
100
79
68
99

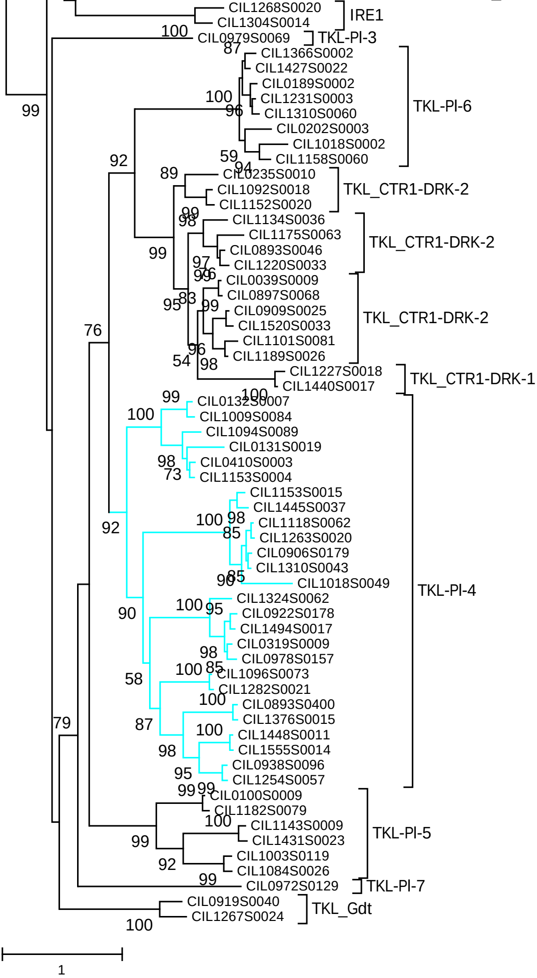
CIL1268S0020
CIL1304S0014
IRE1
CIL0979S0069
TKL-PI-3
CIL1366S0002
CIL1427S0022
CIL0189S0002
CIL1231S0003
CIL1310S0060
CIL0202S0003
CIL1018S0002
CIL1158S0060
TKL-PI-6
CIL0235S0010
CIL1092S0018
CIL1152S0020
TKL_CTR1-DRK-2
CIL1134S0036
CIL1175S0063
CIL0893S0046
CIL1220S0033
TKL_CTR1-DRK-2
CIL0039S0009
CIL0897S0068
CIL0909S0025
CIL1520S0033
CIL1101S0081
CIL1189S0026
TKL_CTR1-DRK-2
CIL1227S0018
CIL1440S0017
TKL_CTR1-DRK-1
CIL0132S0007
CIL1009S0084
CIL1094S0089
CIL0131S0019
CIL0410S0003
CIL1153S0004
CIL1153S0015
CIL1445S0037
CIL1118S0062
CIL1263S0020
CIL0906S0179
CIL1310S0043
CIL1018S0049
CIL1324S0062
CIL0922S0178
CIL1494S0017
CIL0319S0009
CIL0978S0157
CIL1096S0073
CIL1282S0021
CIL0893S0400
CIL1376S0015
CIL1448S0011
CIL1555S0014
CIL0938S0096
CIL1254S0057
TKL-PI-4
CIL0100S0009
CIL1182S0079
CIL1143S0009
CIL1431S0023
CIL1003S0119
CIL1084S0026
TKL-PI-5
CIL0972S0129
TKL-PI-7
CIL0919S0040
CIL1267S0024
TKL_Gdt
1